INSTALLATION GUIDE

Isodrive 900

schweigen

www.schweigen.co.nz

03/2024/V1

Welcome

Thank you for purchasing your new Schweigen Isodrive system.

To get the maximum output from this unit, please read through this guide before use and installation.

This guide contains important information on the correct use and maintenance of the unit, as well as important safety notes. This will ensure your personal safety and the lasting value of your Isodrive system.

Please always retain your proof of purchase to aid in any warranty queries.

This appliance and its packaging are produced by processes that minimise waste and respect the environment.

Please help us to continue this effort to protect the environment by using the appliance efficiently and dispose of the packaging in a responsible manner.

Index

1. Welcome 2

2. Your Safety
Before Installation 4
Electrical Cord 4
Motor Features 5
General Notes on Installation and Use 5
Recommended Installation Distance 5
Minimum Mounting Height 6
Avoidance of Back Flow 6
Safety of Children 6
Replacement of Supply Cord 6
Why Flexi-duct 6

3. Description
Isodrive Motor 7

4. Installation
Roof Installation 9
Wall Installation 10
Flat Roof Installation 12
Through Wall Installation for Isodrive 900 13
Fan Unit Shutter Assembly for Isodrive 900 (Optional) 14
Twin 200mm Outlet Installation Example 15

5. Measurements
Measurements for Isodrive 900 16

6. Flexible Duct
Shallow Roof Space 18
Important Note 18
Securing Flexible Duct 19

7. Parts List
Parts List for Isodrive 900 20

8. Maintenance
Roof Restoration or Cleaning 22

9. Warranty/Disclaimer 23

RECEIVING YOUR RANGEHOOD

Please read this section thoroughly before attempting to operate the appliance. Inspect your product upon receipt. **Any damage or defects MUST be reported within 48 hours, or no claim will be recognised.**

DO NOT INSTALL THIS APPLIANCE IF YOU FIND IT DAMAGED.

If this product is installed damaged, the supplier, nor the retailer, will be responsible for the costs associated with the repair, replacement, removal or re-installation of the appliances.

This appliance is not intended for use by person/s (including children) with reduced physical, sensory or mental capabilities, or lack of experience and/or knowledge. Unless the person has been given supervision or instruction concerning the use of the appliance by a person responsible for their safety. Children should be supervised to ensure that they do not play with the appliance, it is not a toy.

Do not install Isodrive motor to a non-Schweigen and/or non-silent rangehood. If you fail to do so, your warranty will be voided.

The manufacturer declines all responsibility in case of failure to adopt proper safety measures.

Ensure that the location in which this appliance is installed, has good and permanent ventilation.

Please consult local laws and regulations and install in accordance.

Use an electrical connector with earth that is correct for your location.

Check that the voltage in your area corresponds to the appliance as indicated on the rating label.

Before Installation

We recommend this appliance to be installed or repaired by a qualified Schweigen Home Appliances technician.

Please see our website **www.schweigen.co.nz** for recommended installers.

It is dangerous to modify any part of this appliance. Modification of any kind, will immediately void the warranty.

Electrical Cord

Ensure the supply cord is not exposed to heat, chemicals or sharp objects. If the supply cord is damaged, it must be replaced by the manufacturer, service agent or a similarly qualified person in order to avoid a hazard. The power supply cord connection **MUST BE** installed in such a way that access is easy in case of emergency.

This guide is for the installation of the Isodrive motor system after the canopy/rangehood or bathroom extraction grill has been mounted on the wall or ceiling. (Refer to canopy/rangehood or bathroom extraction unit installation manual).

NOTE: All PVC pipe and flexi ducting measurements are referring to inside measurements, unless otherwise mentioned.

Motor Features

- Roof and wall mounting with IPX4 degree of weather protection.
- Super quiet, long vane, backward curved centrifugal fan.
- Airflow is dependant on installation and the ducting used. Using single 200mm flex duct, you should attain up to 900m^3/hr and depending on the ducting installation. The use of a smaller than 150mm (ISD) pipe would result in a loss of airflow.
- Simple installation: mounts onto a 160mm (OSD) PVC pipe for ultimate strength and allows for easy Dektite roof sealing.
- Industrial quality motor and fan made in Germany and rated at 40,000 hours.
- Motor is a high efficiency PSC type and rated at 135W costing around the same as two 70W light globes to run.
- **WARRANTY 10 YEARS** return to manufacturer. Covers faulty manufacturing or components. It does not cover normal wear and tear.

General Notes on Installation and Use

This fan unit is designed to be installed using 160mm (OSD) PVC pipe as the initial connection duct to the fan module, and is supplied with a 160mm (OSD) PVC pipe to 200mm (ISD) flexible duct bell-mouth adaptor.

This fan is suitable for connection to multiple duct runs with a minimum inlet area of 22,000mm^2 and length up to 15 metres maximum (check with supplier if longer duct length required). Where possible flexible ducting must be extended sufficiently to present a smooth air passage with bends of at least the radii of twice the diameter of the duct.

WARNING: The rangehood must not be ducted into a wall cavity or a ceiling space, where a build up of grease can occur and become a potential fire risk. This will void warranty.

NOTE: Fan module and dual foil flexi-duct are acoustically matched. Use of semi-rigid or rigid ducting will result in increased noise and may void warranty. See installation instruction notes 'Why flexi-duct'.

Recommended Installation Distance

Isodrive 900 motor, **recommended 4 to 5 metres** of flexi ducting.

NOTE: Although less than 4 to 5 metres will increase extraction power this will result in higher noise level. Maximum duct length 15 metres. Check with supplier if longer duct length is required. Do not reduce the duct size at any time and avoid sharp bends.

Minimum Mounting Height

This fan unit is intended for mounting at a minimum height of 2.1 metres (measured to the lower part of the fan impeller) above a floor or the ground.

Avoidance of Back Flow

Care should be taken to avoid the back flow of gases into the room from the open flue of gas or other open fire appliances.

Safety of Children

This fan is not intended for use by young children or infirm persons without supervision.

Replacement of supply cord

If the supply cord is damaged, it must be replaced by a service agent or suitably qualified person in order to avoid a hazard.

Why Flexi-duct

Some internet sites strongly recommend the use of rigid ducting over fully flexible ducting. This may well be the case with conventional rangehoods with internal motor rangehood but not with external motor rangehood.

Schweigen's unique Isodrive system works in the opposite way to conventional rangehoods, pulling air through the hood and acoustically matched ducting, producing almost silent high volume flow. The use of a complete rigid or semi-rigid ducting system will allow an organ piping effect to occur; like a didgeridoo where a noise is produced at one end of a hollow rigid pipe and the noise is amplified out the other.

The Isodrive system places the noise outside the house and it needs to be kept there.

WARNING: Installation without the use of at least the minimum recommended length of acoustically matched flexi-ducting in the system will void performance expectations. Any installation problem must be reported to Schweigen. Call outs relating to incorrect installation will result in a service fee direct to the customer. Schweigen takes no responsibility for problems caused by faulty installation, this may void warranty. A preferred installer list can be obtained from Schweigen website **www.schweigen.co.nz** or call **0800 200 510.**

Isodrive Motor

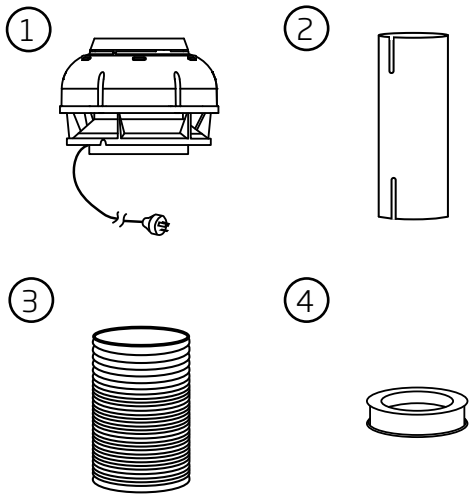

Included in the box:

1. Isodrive 900 motor *(280W x 200H mm approx.)*
   Approx. 3 metre, 10amp cable and standard male plug
2. Fire resistant 150mm (160mm OSD) PVC riser pipe
   Note: Cable cut-out at the bottom end only
3. Flexible ducting
   Approx. 6 metres, 200mm (210mm OD[1]) diameter
4. Bell-mouth adopter ring
   200mm duct to 150mm riser

Not included in the box:

- Roof seal kit / Dektite
- Support straps for poly pipe which connects to the roof truss
- Aluminium Foil tape
- Hanging Bracket require for wall mount
- Wall Cover Plate (wall mount only)
- Zip ties

Additional S2 kit for twin 200mm outlet using 900 Isodrive motor:

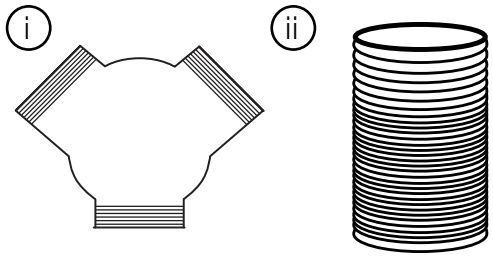

i. One 150mm x 150mm x 200mm Y joint

ii. Flexible ducting
   Approx. 3 metre, 200mm (210mm OD[1]) diameter

[1] OD refers to outside dimension.

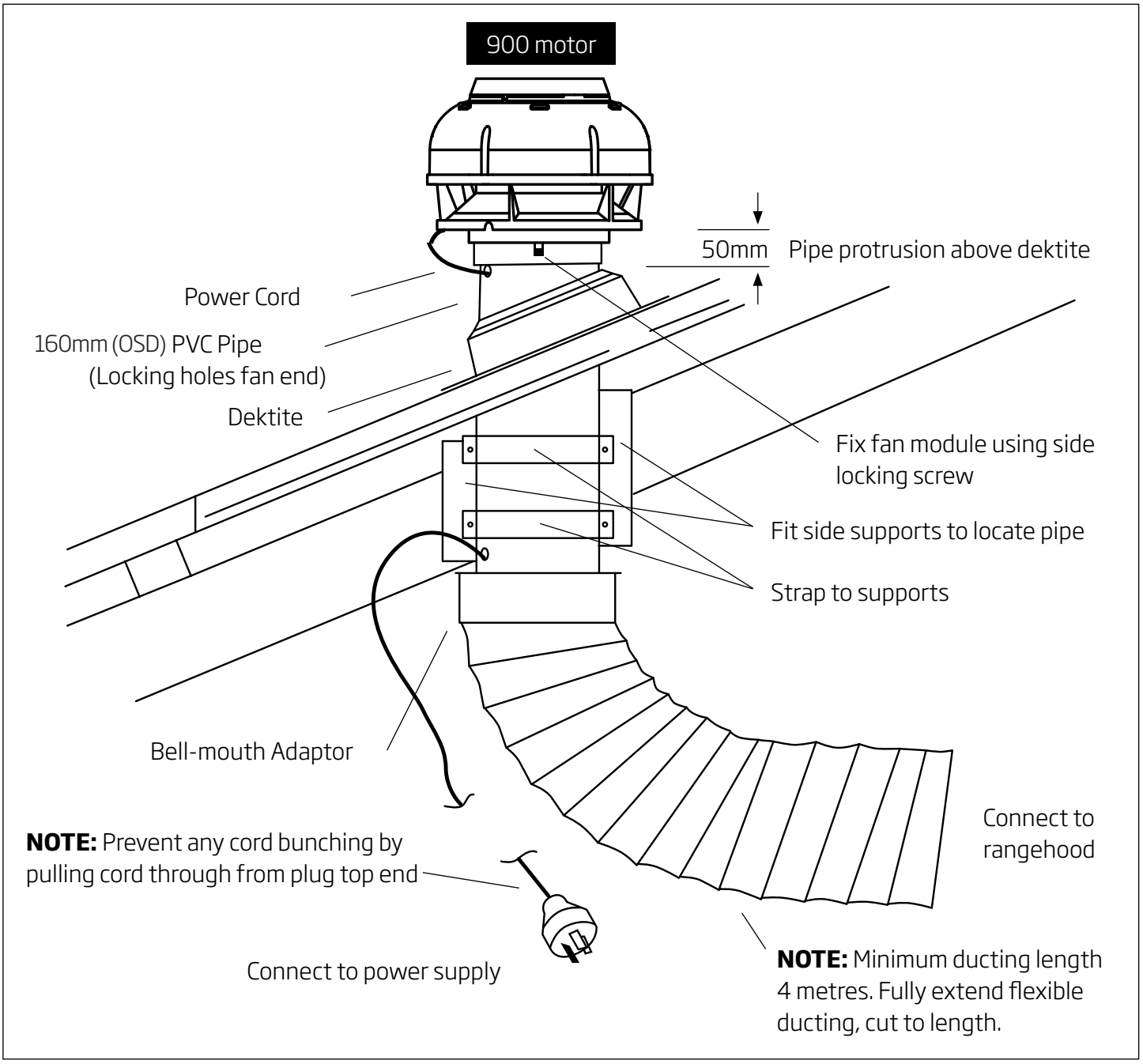

Figure 1 Roof Mount Option

IMPORTANT

For more flexible ducting instructions, refer page 22. Shutter assembly for 1600 motor is not shown in the diagram. Weather shield (for 1600 motor only) should be installed to prevent rain/water entering the unit.

Roof Installation

Recommended duct length: minimum 4 metres.

Mount 160mm (OSD) rigid PVC pipe securely to beams, trusses or other appropriate structures: refer figure 1. The pipe should be mounted vertically with the roof penetration being sealed using a Dektite or other appropriate sealing membrane or device.

Ensure that the PVC pipe protrudes at least 50mm past the top of the Dektite, checking that the fan assembly clears the roof cladding at upper edge, refer figure 1.

Pass power cord and plug through mounting flange and pipe, then out the slotted PVC pipe for connection to the female plug coming from the canopy/rangehood. Refer to figure 4.

Do not insert plug into socket outlet or switch on until installation has been completed. Fit fan module to pipe and fix in position using side locking screw.

Certain external installation configurations may cause audible levels of noise to be heard due to the air being expelled from the motor. To minimize external noise disturbance you can use between 6 to 15 metres of flexi duct to place the Isodrive motor in an appropriate position.

Please be aware that the 900 motor is capable of expelling air at 900m^3/hr.

For more information on environmental noise limit and conditions please contact your local Council. We have a list of recommended installers available on the Schweigen website.

Wall Installation

This type of installation is similar to roof mounting, ensuring that the pipe extends at least 50mm past the wall surface refer figure 2. If the pipe length is shortened, reproduce the power cord exit slot on the inside of the wall.

NOTE: By decreasing the length of the flexi duct from which specified (refer to installation instructions) there will be an increase in airflow and noise levels as a result. This increase in airflow can cause movement of air to be heard through the system and inhibit the system to run silently.

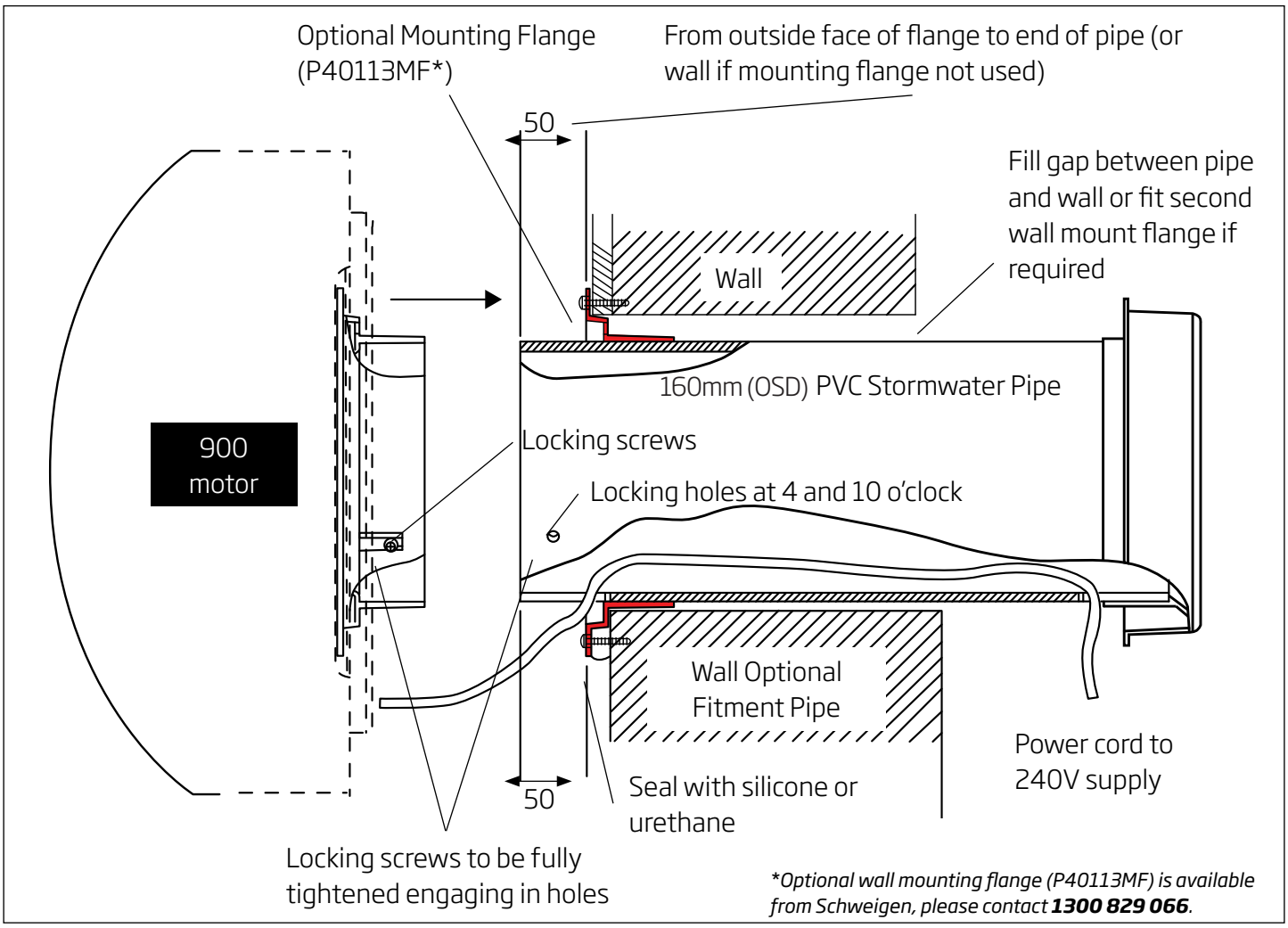

Figure 2 Wall Installation

IMPORANT

For more flexible ducting instructions, refer page 22.

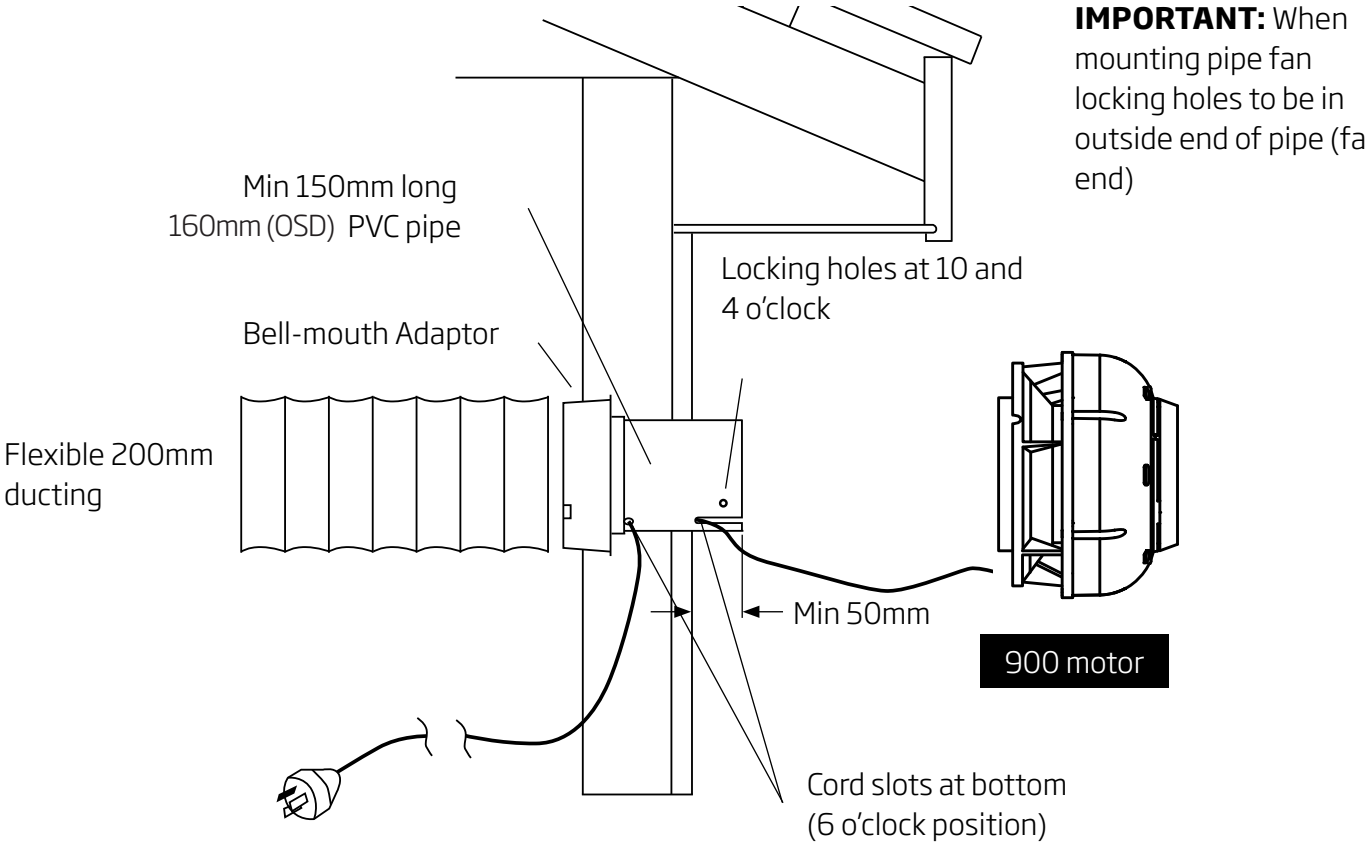

NOTE: Ensure that power cord is fed through exit slot and is not allowed to double back restricting fan inlet.

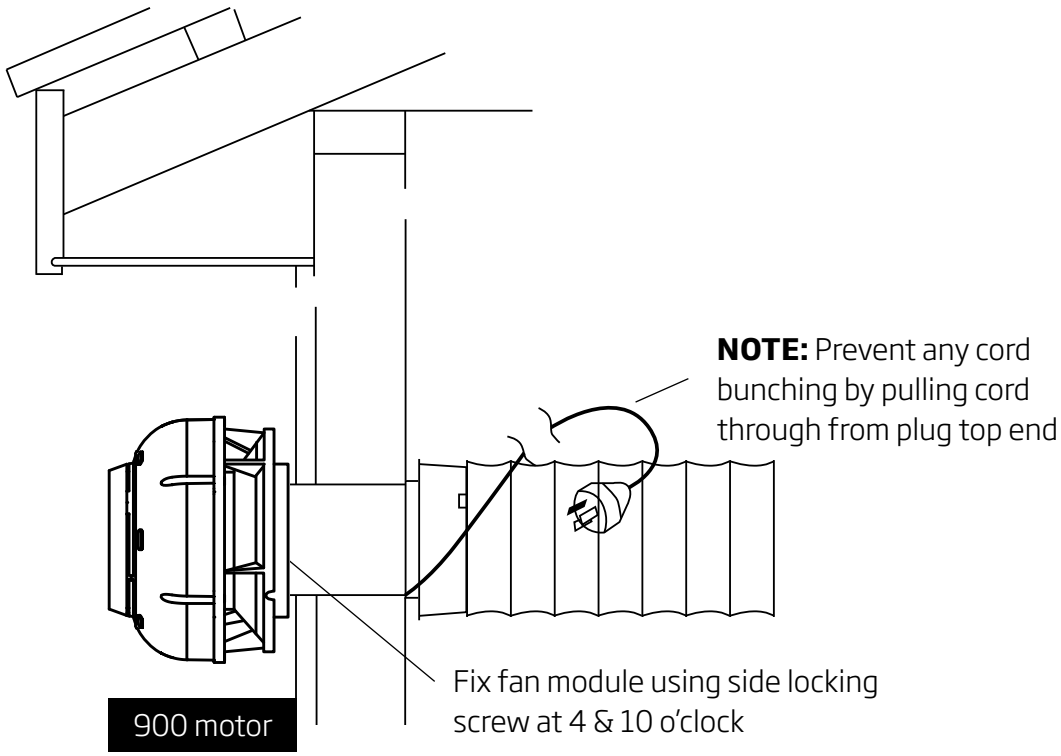

Figure 3 Wall Mount Option

Flat Roof Installation

Flat roof mounting using optional mounting flange*.

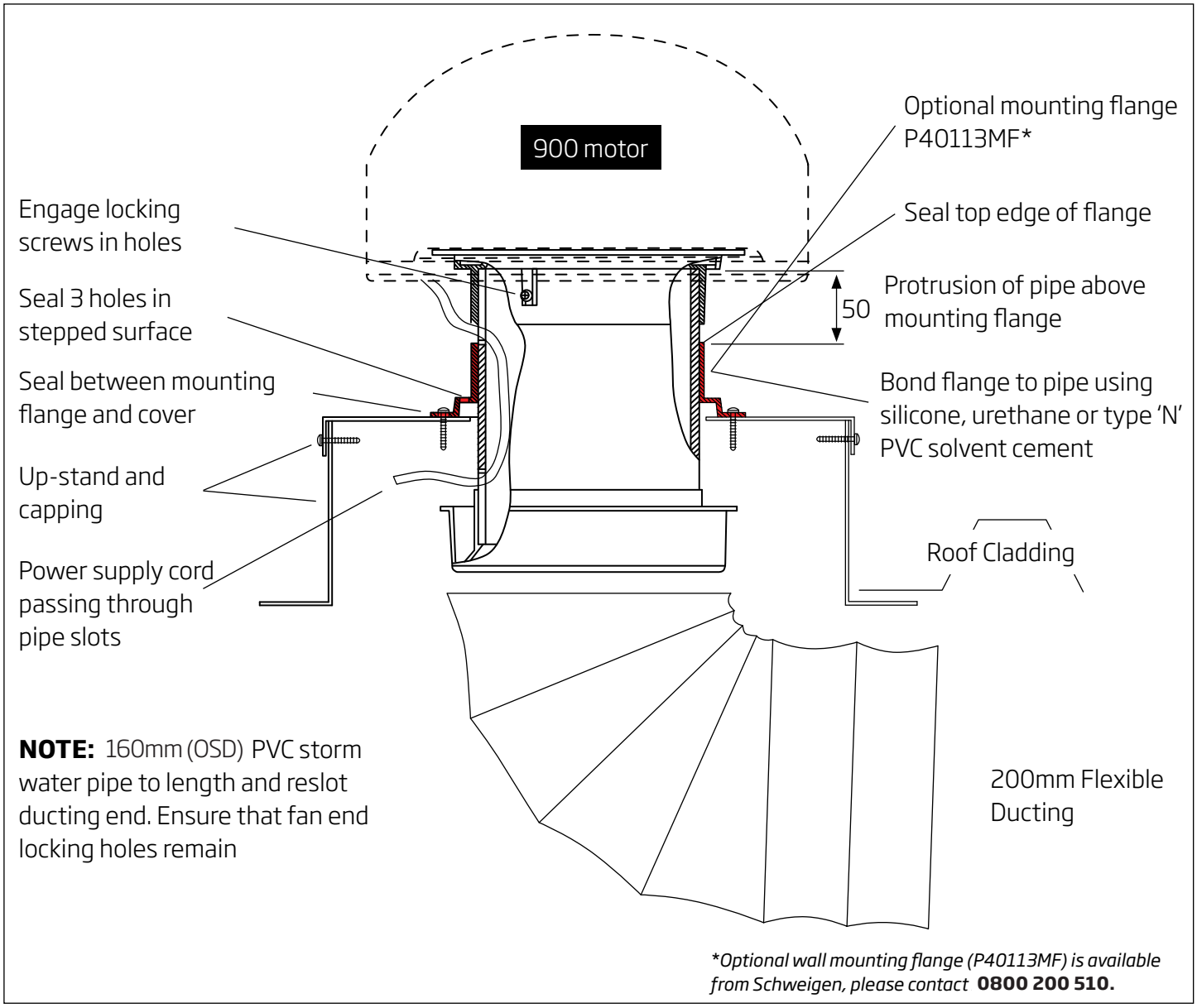

Figure 4

IMPORANT

For more flexible ducting instructions, refer page 22. Shutter assembly for 1600 motor is not shown in the diagram. Weather shield (for 1600 motor only) should be installed to prevent rain/ water entering the unit.

Installation Through Wall for Isodrive 900

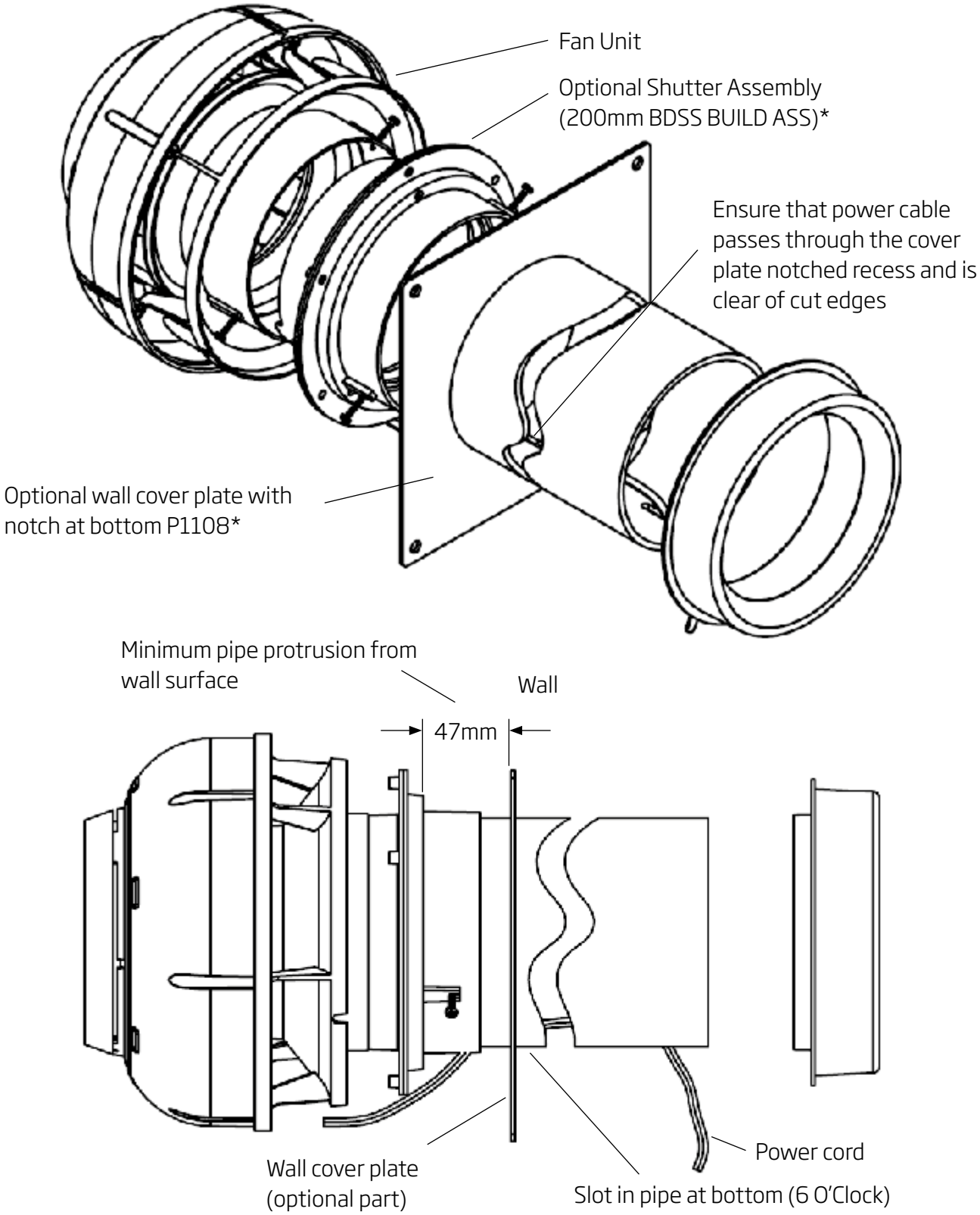

Optional parts are available from Schweigen, please contact* **0800 200 510.

Figure 5

Fan Unit Shutter Assembly for Isodrive 900 (Optional)

1. Assemble by fitting shutter assembly into fan inlet shroud moulding, ensuring that attaching screws align with holes. Alignment can be checked visually by folding in shutter flaps.
2. Fully tighten both screws and re-check fitment into holes.
3. Fit assembly to duct pipe as per installation instructions supplied.

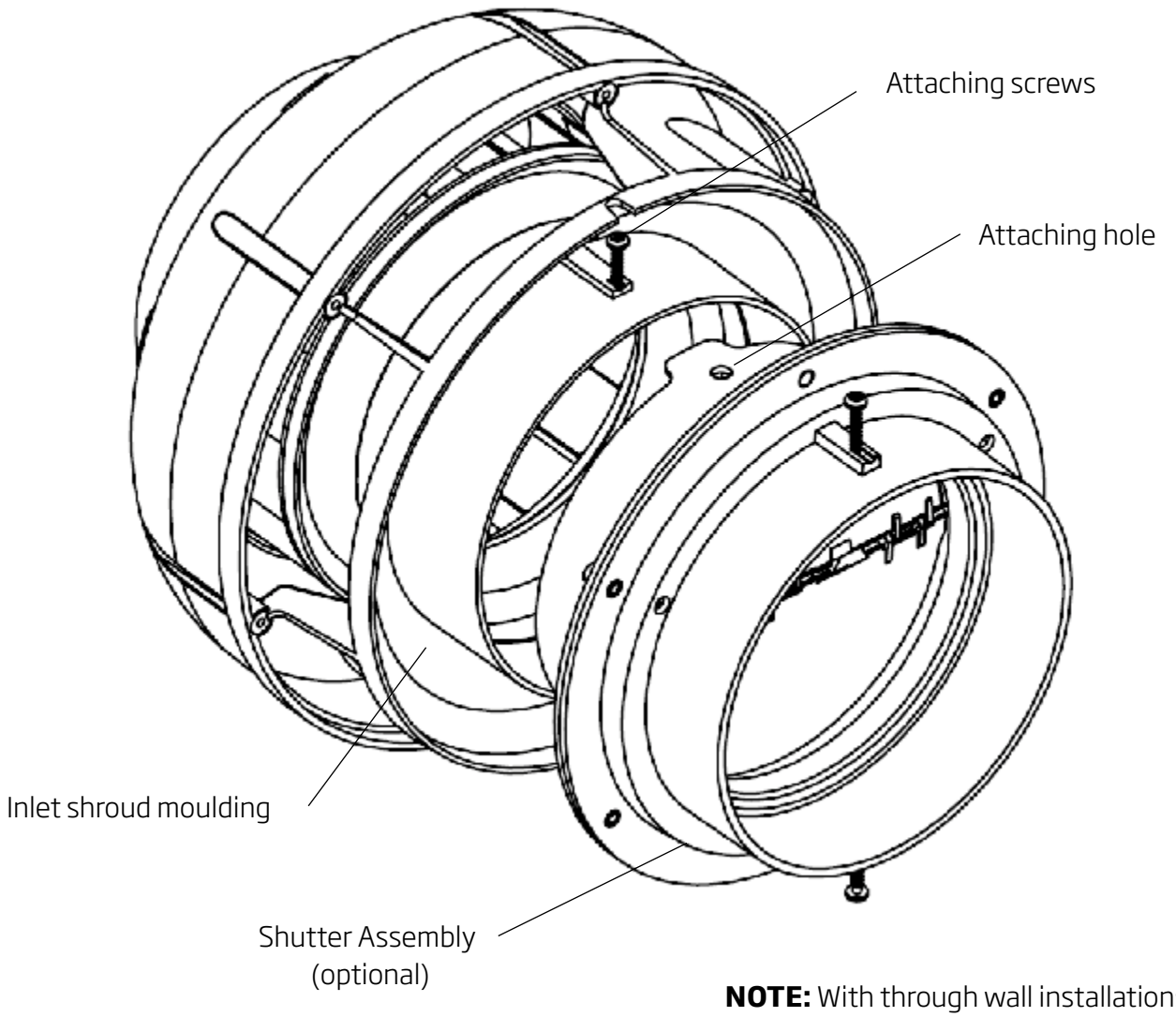

NOTE: With through wall installations flap shaft will be close to vertical

Figure 6

Twin 200mm Outlet Installation Example

This is for use where one motor is to be used and there are two 200mm outlets, refer figure 11.

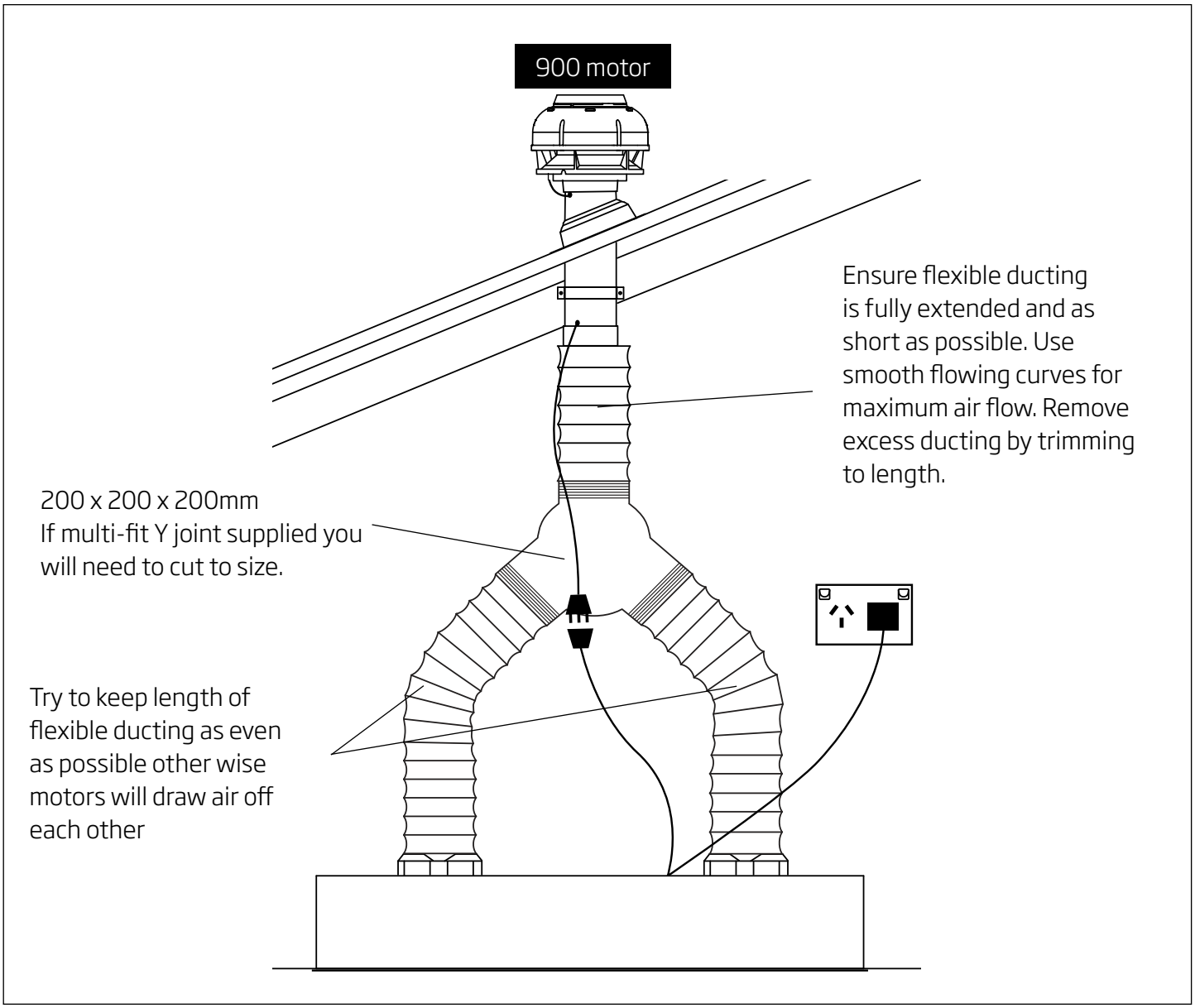

Figure 11 Roof mount option

Measurements for Isodrive 900 (Not to Scale)

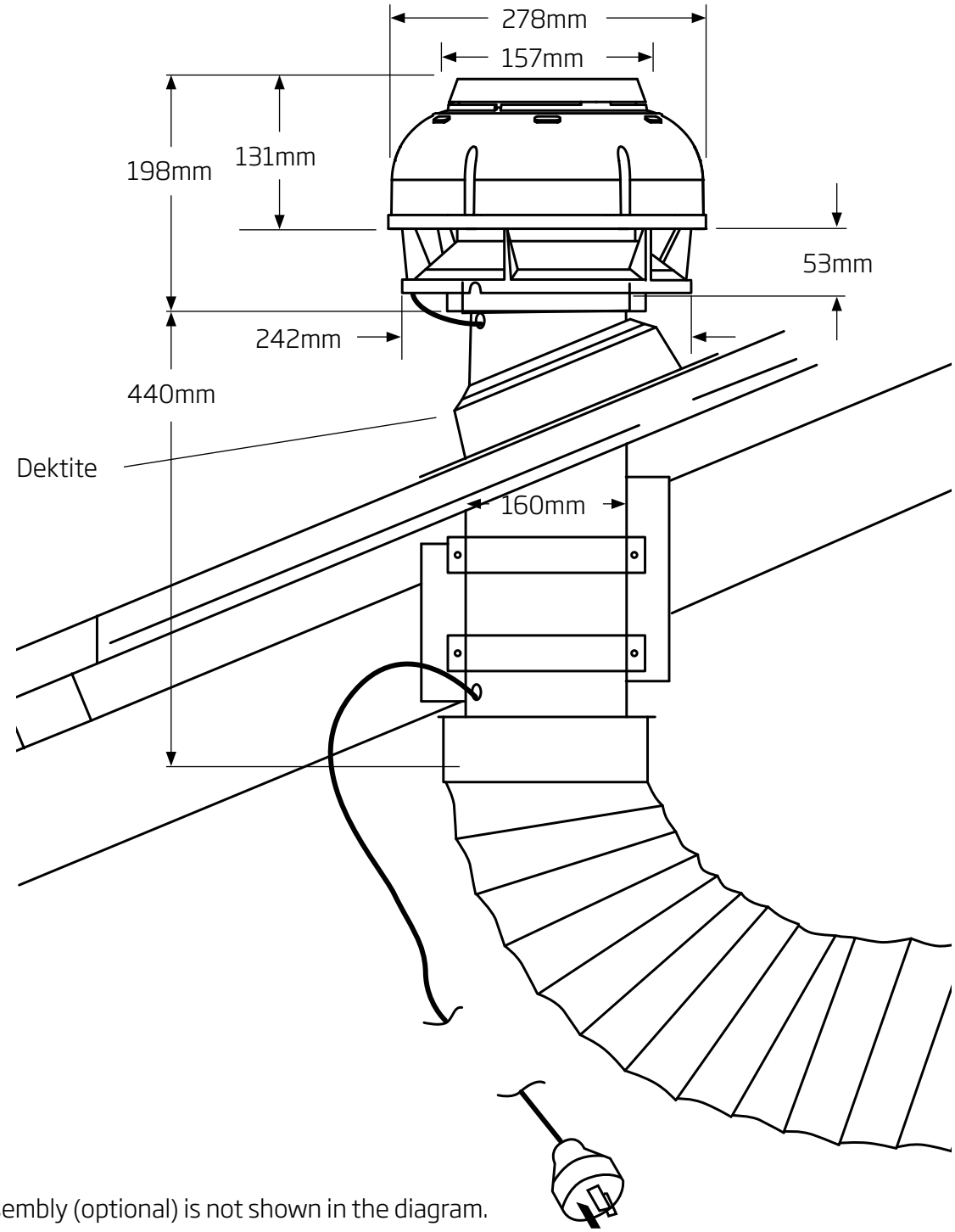

Shutter assembly (optional) is not shown in the diagram.

Flexible Ducting

Flexible ducting must be fully extended and cut to the required length upon installation. Maximum fan performance will not be achieved unless the ducting is fully extended. Failure to fully extend ducting results in a smaller air passage and lower airflows. Incorrect installation may reduce airflow or increase noise levels. Call outs relating to incorrect installation will result in a service fee directed to the customer. Schweigen will take no responsibility for problems caused by faulty installation. **A list of preferred Schweigen installers can be obtained from the Schweigen website www.schweigen.co.nz**

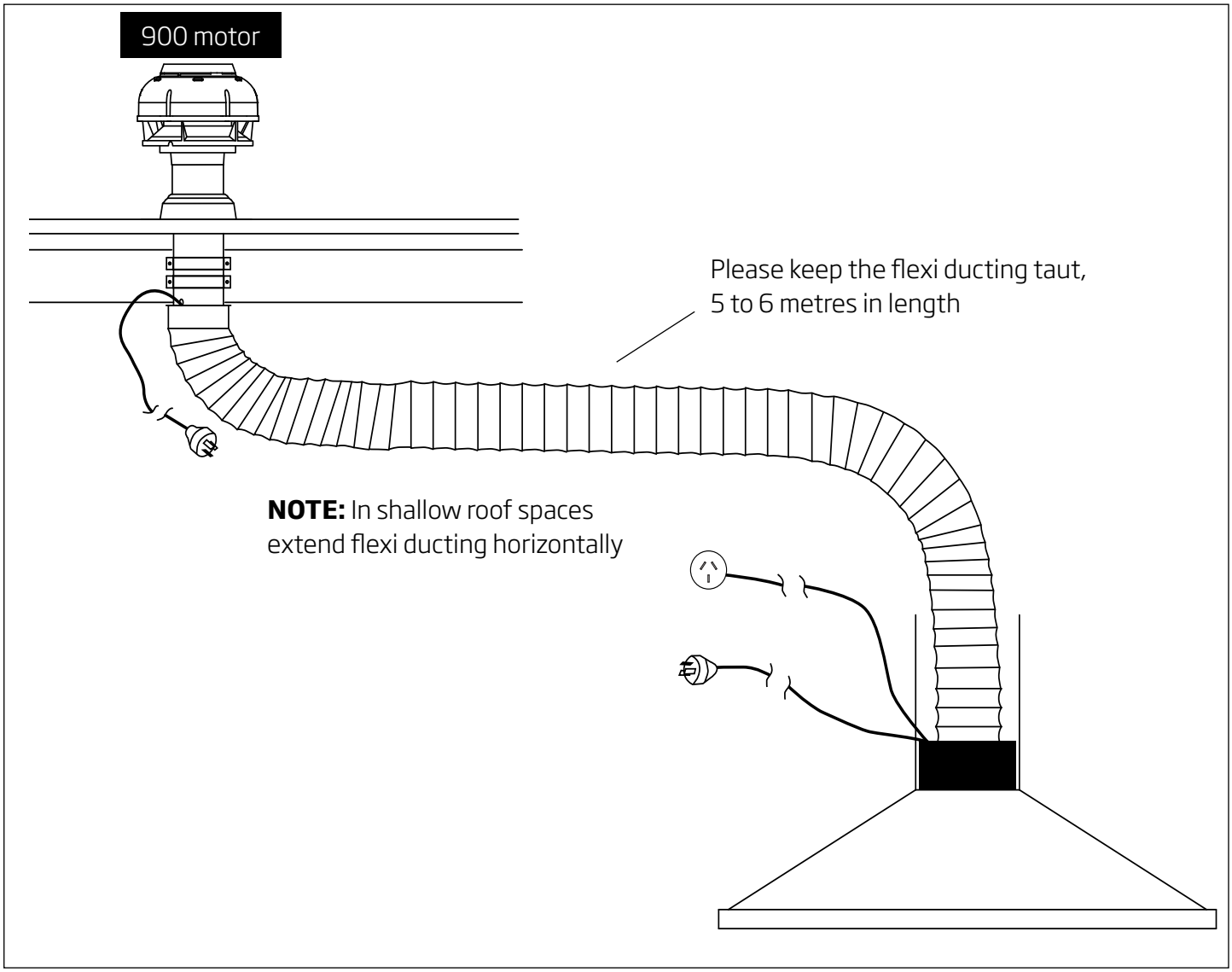

Page 17

Shallow Roof Space

In shallow roof spaces, do not crush or kink flexible ducting, as it will reduce air flow severely. 90 degree curve made of PVC or galvanise can be used as a substitute for the bend, refer to figure 12.

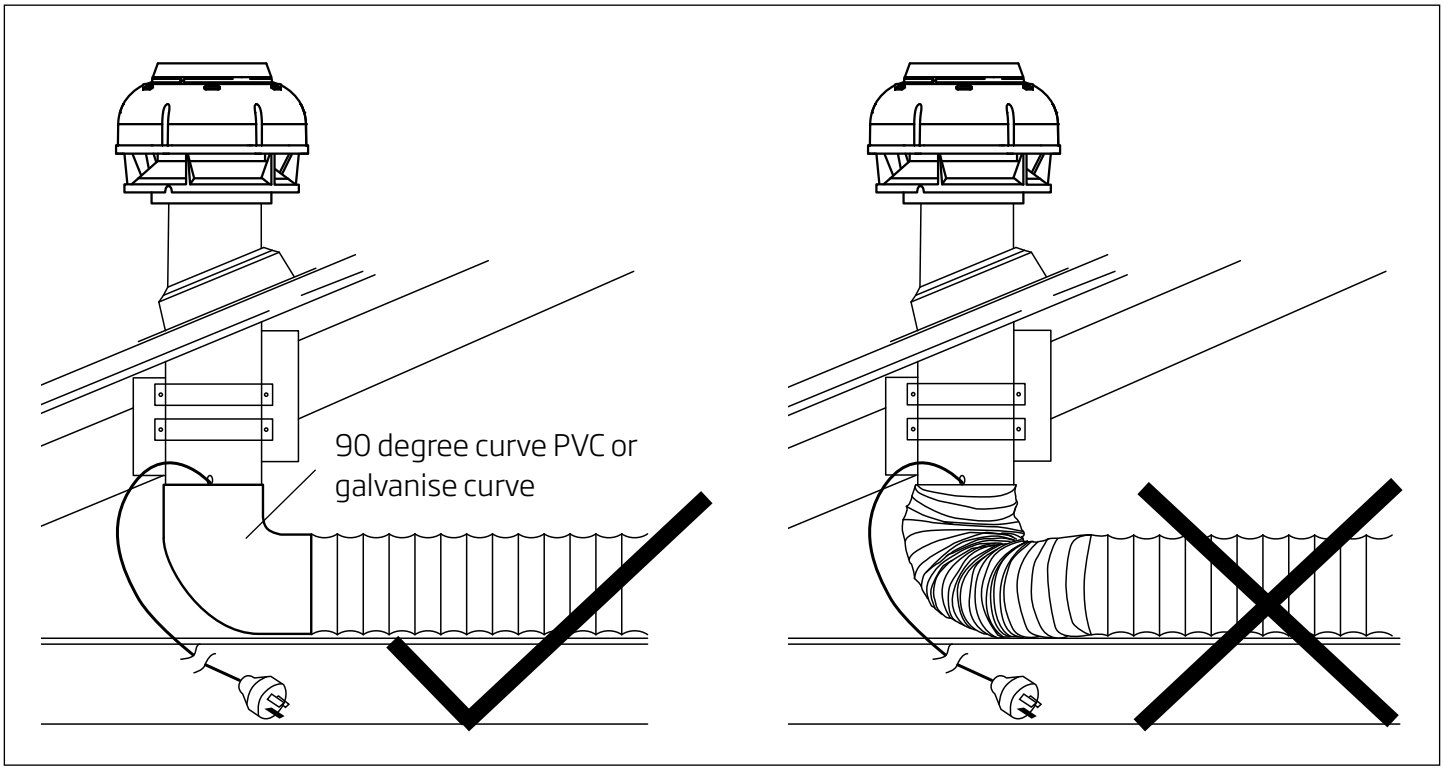

Figure 12

Important Note

Please do not crush or kink flexible ducting, as it will reduce air flow and may cause noise to occur through the system. Ducting needs to be kept taut at all times.

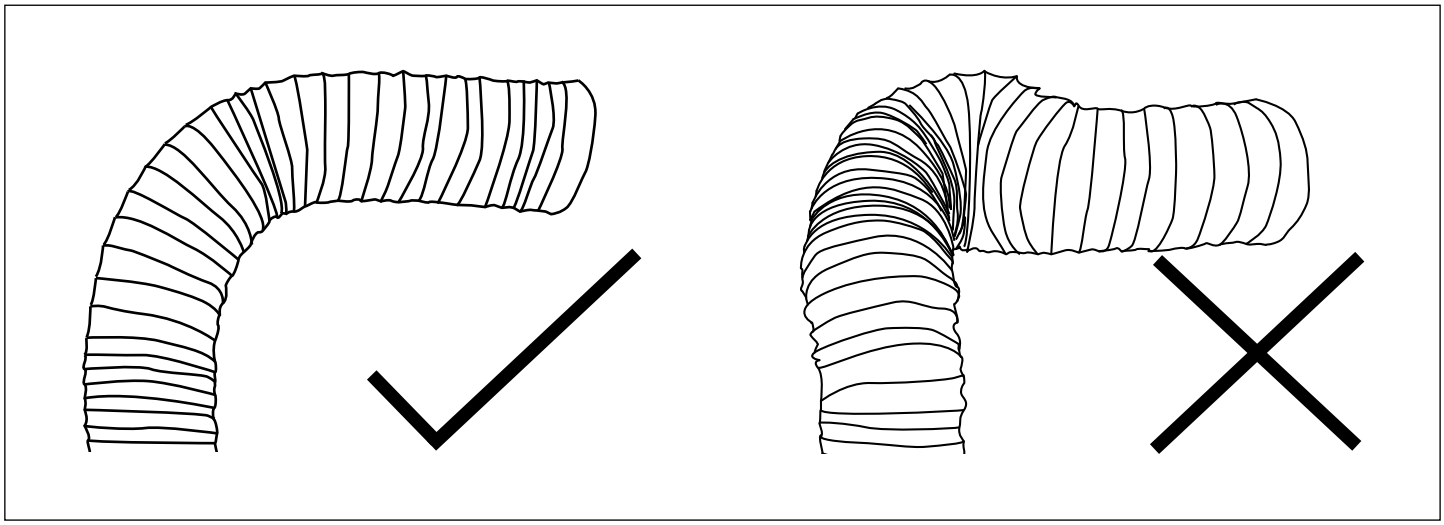

Figure 13

Page 18

Securing Flexible Duct

Flexible duct must be installed with supports at maximum intervals of 1.5 metres. Flexible ductwork can be supported by using gaffer or electrical tape. Provided that it does not restrict the internal diameter of the ducting. Ducting installed looped over hanging beams should be installed in such a manner as to ensure the changes of direction are gradual. Support of the ducting with the use of hangers may be required, see option 2.

NOTE: Ducting should be kept taut at all times.

Option 1

Secure the flexible duct to the beam

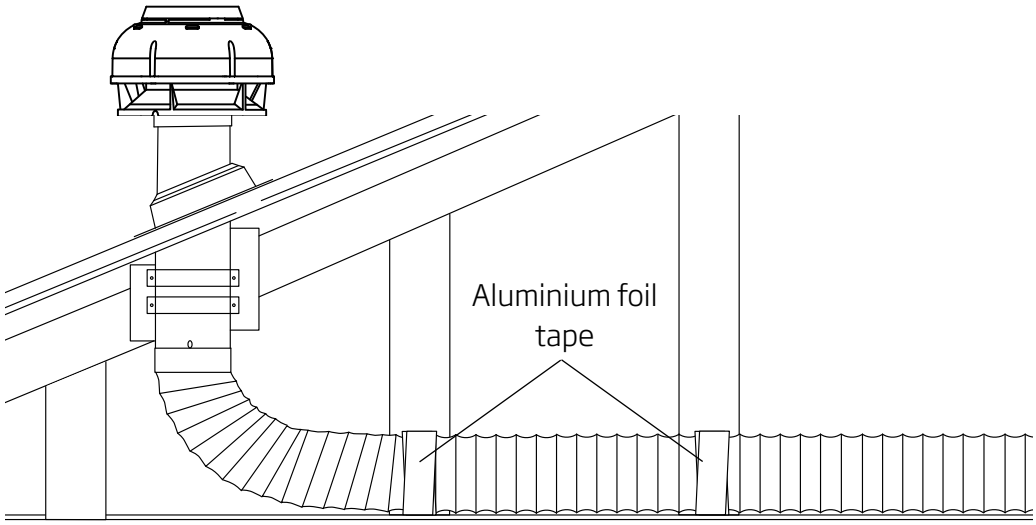

Option 2

Support flexible duct by using hangers.

NOTE: Care shall be taken to minimize sagging or snaking of the duct between supports.

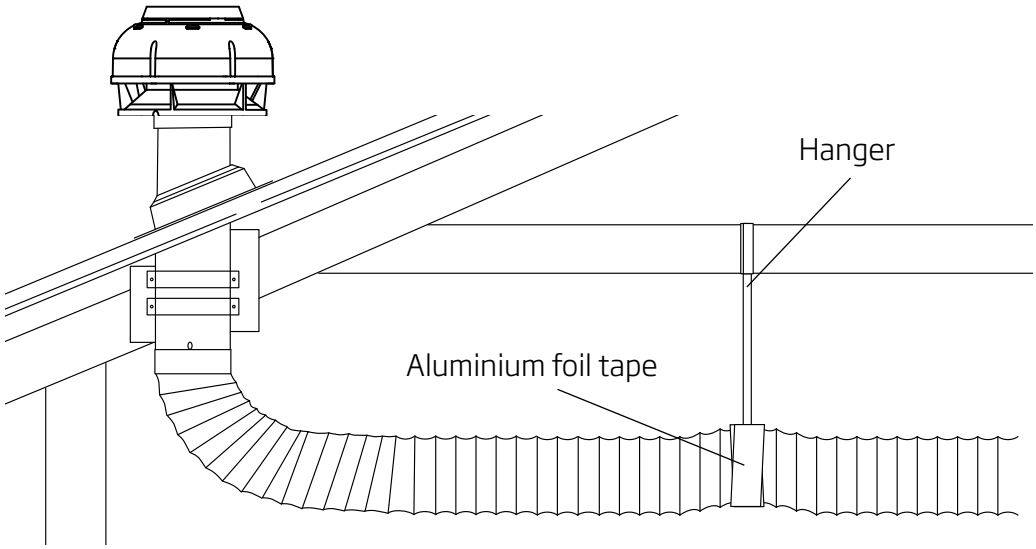

Figure 14 Examples of securing ducting

Parts List for Isodrive 900

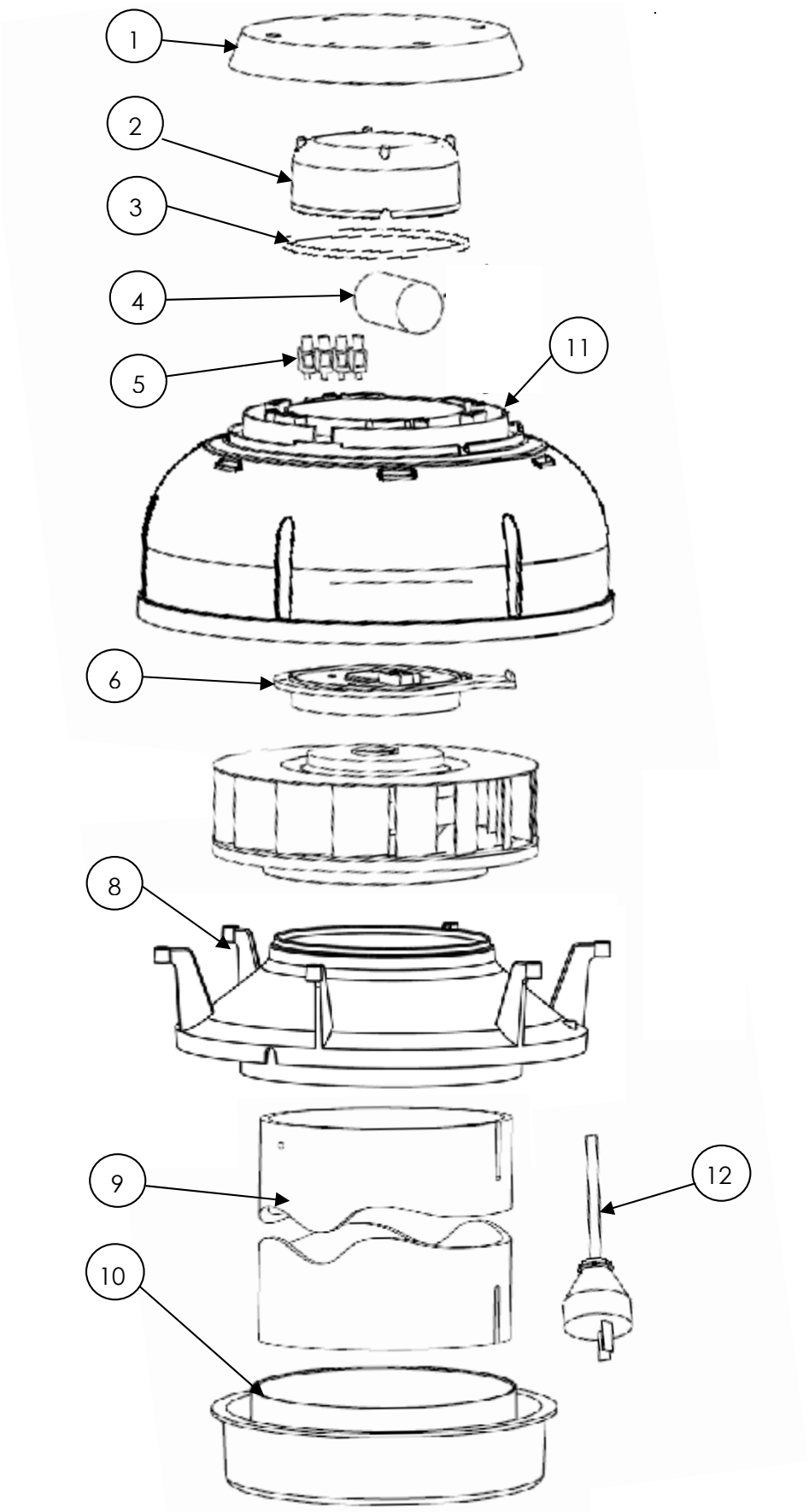

Parts List for Isodrive 900

Number	Part Number	Description	Quantity
1	P40100	Terminal Block Cover	1
2	P40121	Wire Insulator Cap	1
3	P1061	O Ring 4¼" ID	1
4	P1059	Capacitor 2µF	1
5	P807	Terminal Block	1
6	P40102	Fan Plate – Motor Mount	1
8	P40122	900 Inlet Shroud Mount	1
9	P1069	160mm (OSD) Slotted Pipe	1
10	P40114	Bell Mouth Adaptor	1
11	P40101	Fan Shroud	1
12	P301	Power Cable	1

Roof Restoration or Cleaning

Before doing your roof restoration or cleaning, please completely cover the outside motor system and avoid all chemical contact.

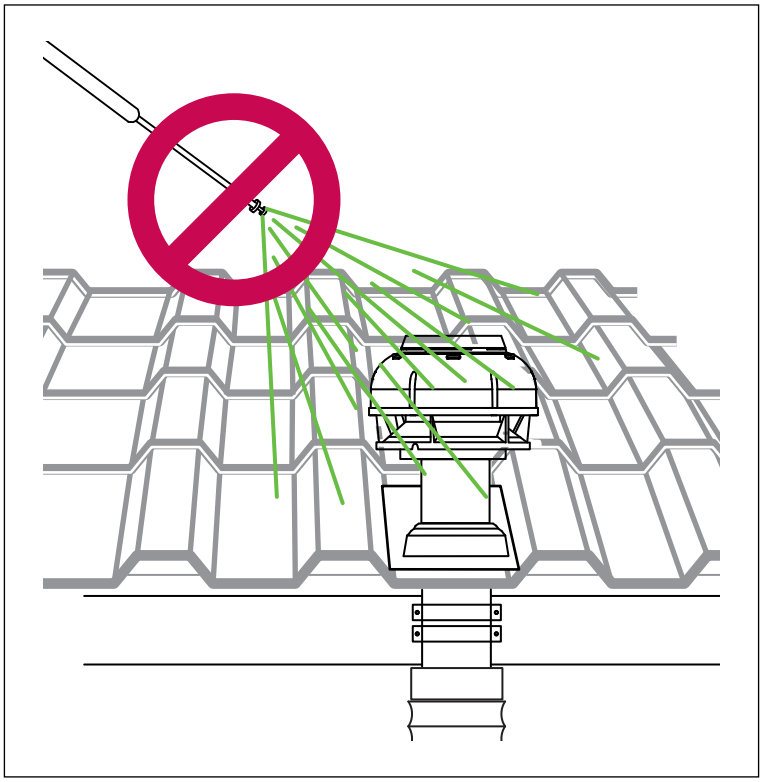

Figure 15 Avoid chemical contact to motor system

IMPORANT

Any damages caused by the use of chemical products are not covered by warranty.

Warranty (See warranty for more information)

Isodrive motor has a 10-Year replacement product warranty. This is a change over warranty. The consumer is responsible for any charges associated with removal of the faulty unit and installation of the new unit. The customer is also responsible for any freight charges incurred in this change over process.

Disclaimer

Under our policy of continuous product development, product specifications may change without notice. Prospective purchasers should therefore check with the retailer to ensure this publication correctly describes the products being offered for sale. All information supplied is to be used for general reference purposes only and is on the understanding that Schweigen Home Appliances will not be liable for any loss, liability or damage of whatever kind arising as a result of any reliance upon such information. All pictures used in the guide are for illustrative purposes only.

schweigen

New Zealand 5 Tolich Place, Henderson, Auckland 0610. **Phone** 0800 200 510
Email info.parex@whirlpool.com **Web** www.schweigen.co.nz